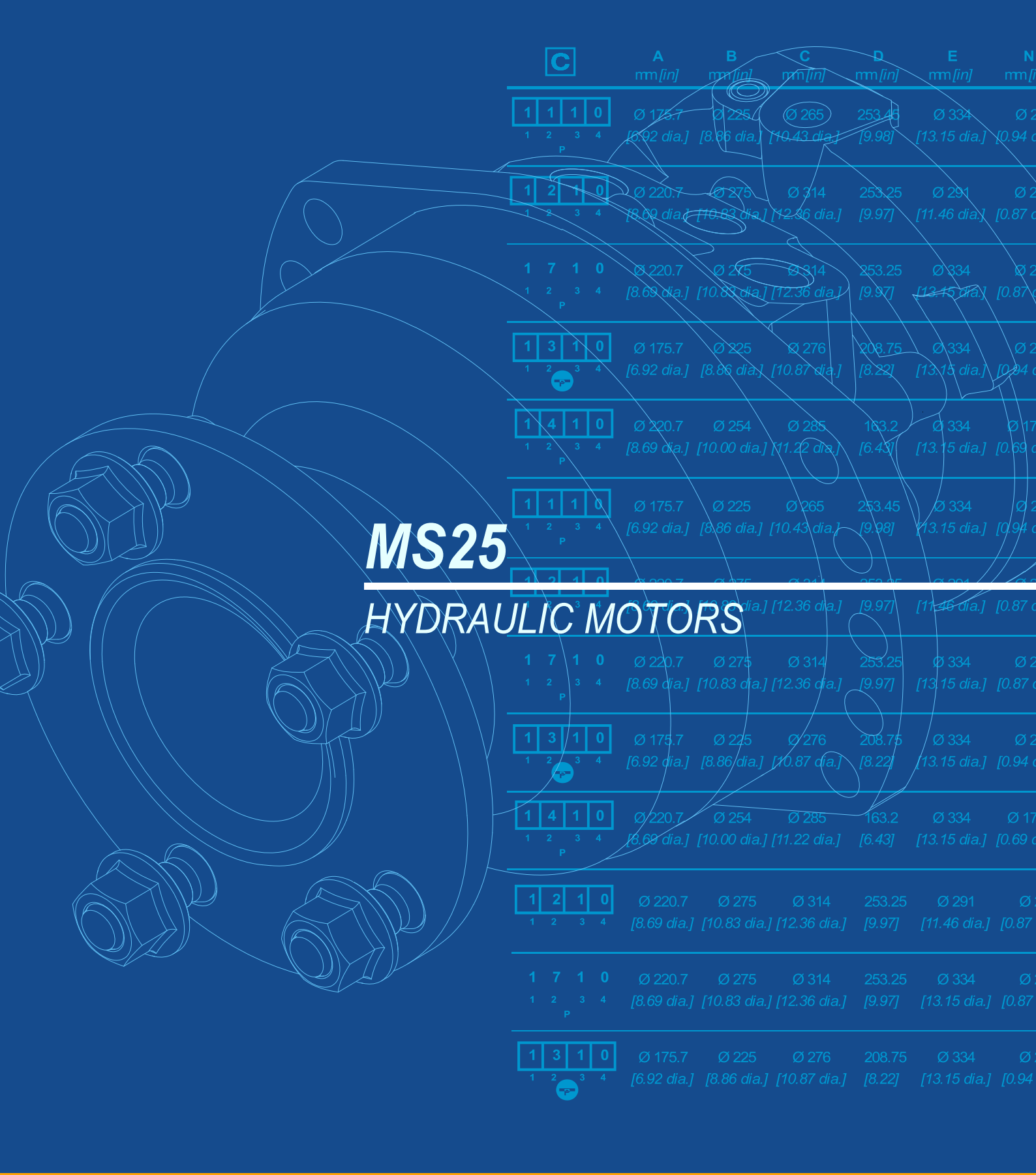

MS25

HYDRAULIC MOTORS

TECHNICAL CATALOG

POCLAIN HYDRAULICS

CHARACTERISTICS

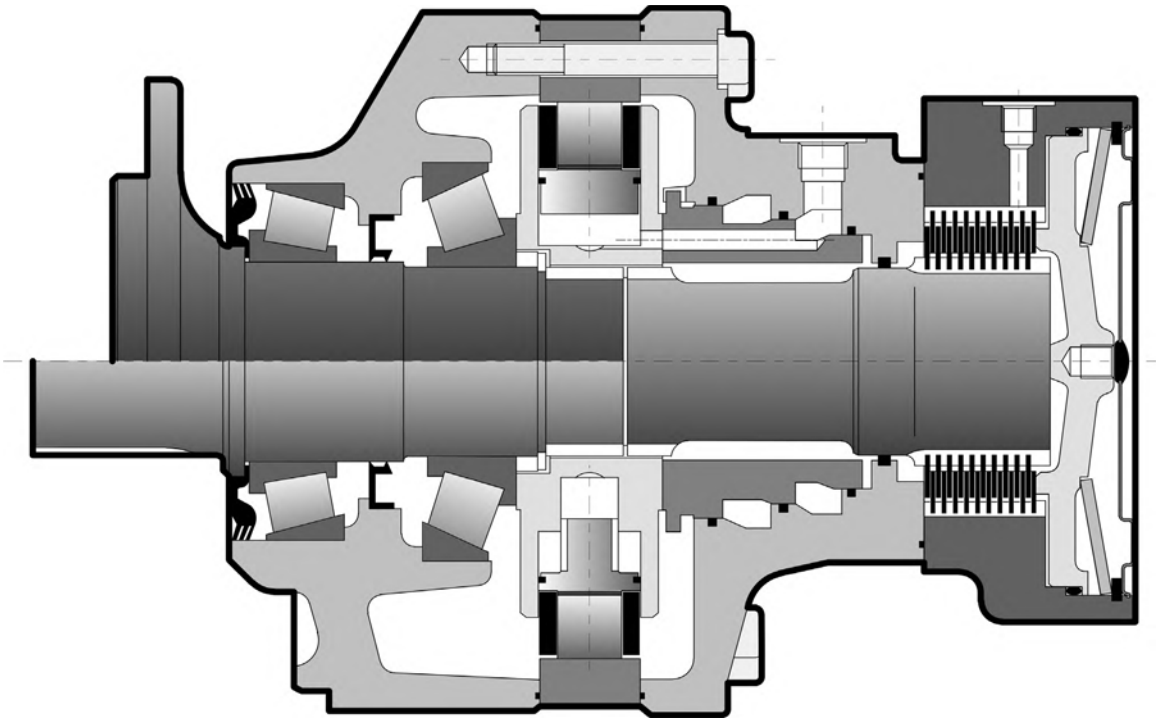

Motor inertia **0.4 kg.m²**

	C	❶ cm³/tr [cu.in/rev.]	❷ cm³/tr [cu.in/rev.]	Theoretical torque ❶ at 100 bar Nm	Theoretical torque ❶ at 1000 PSI [lb.ft]	❶ kW [HP]	Max.power ❷ preferred kW [HP]	Max.power ❷ non-preferred kW [HP]	Max. speed ❶ tr/min [RPM]	Max. speed ❷ tr/min [RPM]	Max. pressure bar [PSI]
Cams with equal lobes	8	2 004 [122,2]	1 002 [61,1]	3 186	[1 620]	90 [121]	60 [80]	45 [60]	145	145	450 [6 527]
	0	2 498 [152,4]	1 249 [76,2]	3 972	[2 020]				137	137	
	1	2 752 [167,8]	1 376 [83,9]	4 376	[2 225]				125	135	
	2	3 006 [183,3]	1 503 [91,7]	4 780	[2 431]				115	130	
Cams with unequal lobes	A	2 505 [152,8]	1 503 [91,7] / 1 002 [61,1]	3 983	[2 025]	90 [121]	60 [80]	45 [60]	115	130	

❶ **First displacement**

❷ **Second displacement**

CONTENT

MODUL

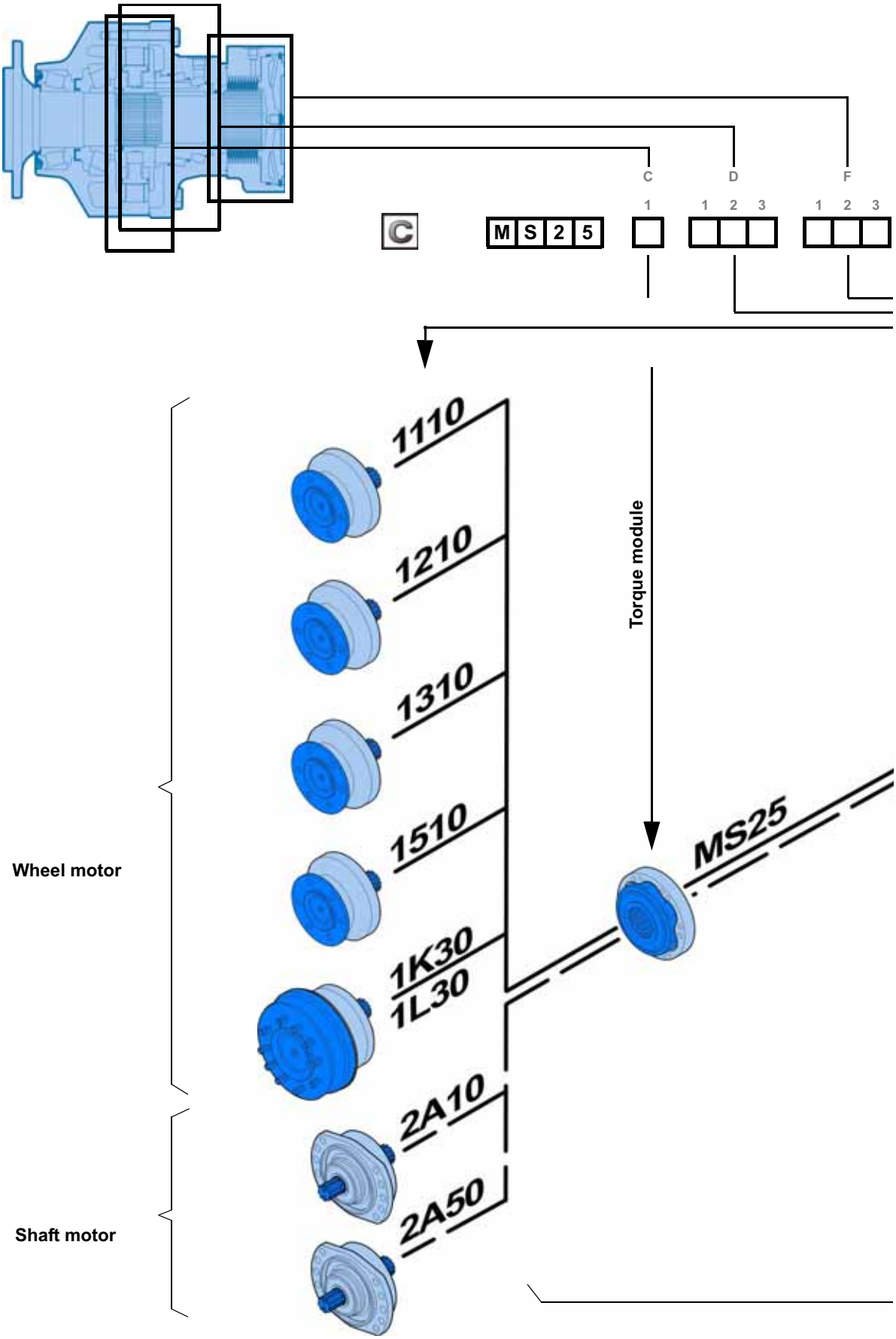
C
D
F
1
1 2 3
1 2 3
C
M S 2 5
1110
1210
1310
1510
1K30
1L30
2A10
2A50
Torque module
MS25
Wheel motor
Shaft motor

ARITY

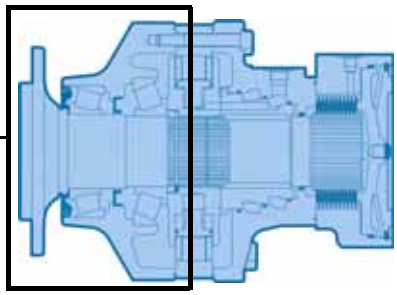

P S

1 2 3 4 1 2 3 4 5 6

Brakes

Valving systems

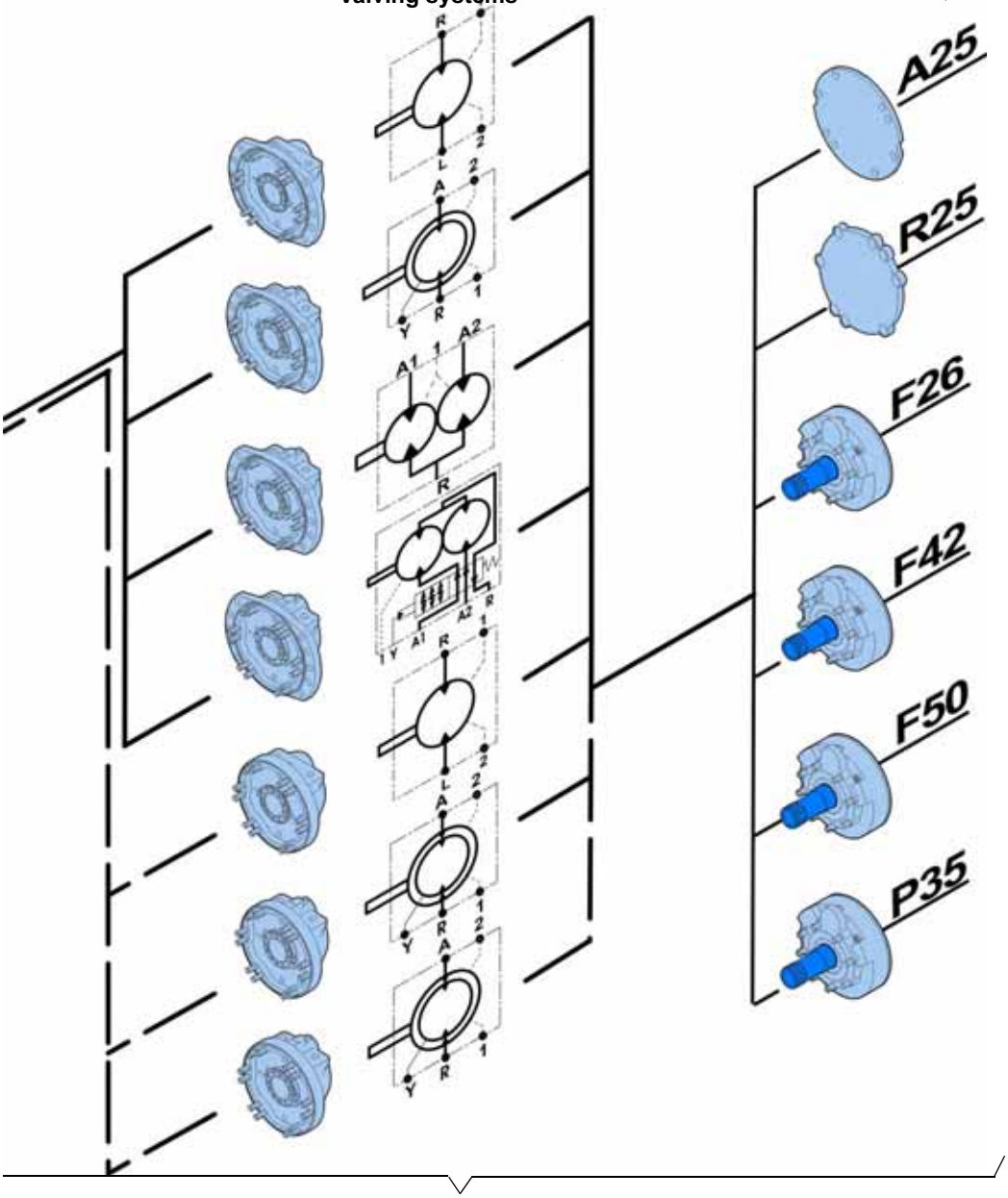

Hydrobases

MODEL

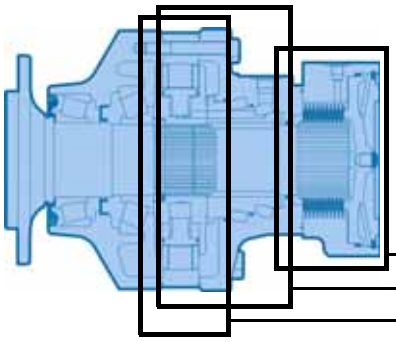

		C	D		F		
		1	1	2	3	1	2	3
C	M S 2 5							

		❶ cm³/tr [cu.in/rev.]	❷ cm³/tr [cu.in/rev.]
Cams with equal lobes	8	2 004 [122,2]	1 002 [61,1]
	0	2 498 [152,4]	1 249 [76,2]
	1	2 752 [167,8]	1 376 [83,9]
	2	3 006 [183,3]	1 503 [91,7]
Cams with unequal lobes	A	2 505 [152,8]	1 503 [91,7] 1 002 [61,1]

❶ **First displacement**
❷ **Second**

	1-displacement	2-displacement	Twin-Lock™	Twin-Lock™ or 2-displacement
Without mounting	1	1	-	-
Lug fixing	2	2	E	V

No transmission cover	0
ISO 6162 SAE flanges **ISO 9974-1** metric connections	1

1-displacement valving	1	
Symmetrical	A	Ratio 2
	B	Ratio <2
	C	Ratio >2
2-displacement & Twin-Lock™ valving (Clockwise)	D	Ratio 2
	E	Ratio <2
	F	Ratio >2
2-displacement & Twin-Lock™ valving (Counterclockwise)	G	Ratio 2
	H	Ratio <2
	J	Ratio >2

Without brake (simple plate)	A 2 5
Brake	P 3 5
	F 2 6
	F 4 2
	F 5 0
Without brake (reinforced plate)	R 2 5

CODE

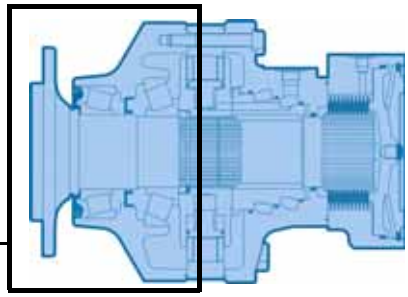

P S

1 2 3 4 1 2 3 4 5 6

0	Without bearing support
1	Without mounting
2	Lug mounting

Without cable	1	
Right-hand cable outlet	2	H - J
Left-hand cable outlet	3	
Without cable	4	
Right-hand cable outlet	5	K - L
Left-hand cable outlet	6	

Without shaft	0
10 x Ø24 onØ335	1
12 x Ø25 onØ425	2
10 x Ø24 onØ335	3
12 (8+4) Ø24 onØ275	5
Drum brake(432 x 102)	H
	J
	K
	L
For male shaft bearing support	A

Without Options or Adaptations	0
Fluorinated elastomer seals	1
T4 Speed sensor installed	2
Industrial bearing support	6
Diamond™	7
Predisposition for speed sensor	8
Double centering	9
Hollow shaft	A
Drain on the bearing support	B
Abrasive environment	C
Reinforced sealing	E
Special wheel rim mounting	G
Surface heat treatment of the shaft	J
TR Speed sensor installed	S

Without studs	1
With studs + nuts	2
With studs	3
M threaded holes	4

Male shafts

NF E 22141 splines	1
DIN 5480 splines	5

Methodology :
This document is intended for manufacturers of machines that incorporate Poclain Hydraulics products. It describes the technical characteristics of Poclain Hydraulics products and specifies installation conditions that will ensure optimum operation.
This document includes important comments concerning safety. They are indicated in the following way:

	Safety comment.

This document also includes essential operating instructions for the product and general information. These are indicated in the following way:

	Essential instructions.
	General information .
	Information on the model number.Information on the model code.
	Weight of component without oil.
	Volume of oil.
	Units.
	Tightening torque.
	Screws.
	Information intended for Poclain-Hydraulics personnel.

The views in this document are created using metric standards.
The dimensional data is given in mm and in inches (inches are between brackets and italic)

Dimensions for standard (1110) 1-displacement motor

	210 kg *[462 lb]*	270 kg *[594 lb]*
	5,00 L *[300 cu.in]*	4,00 L *[240 cu.in]*

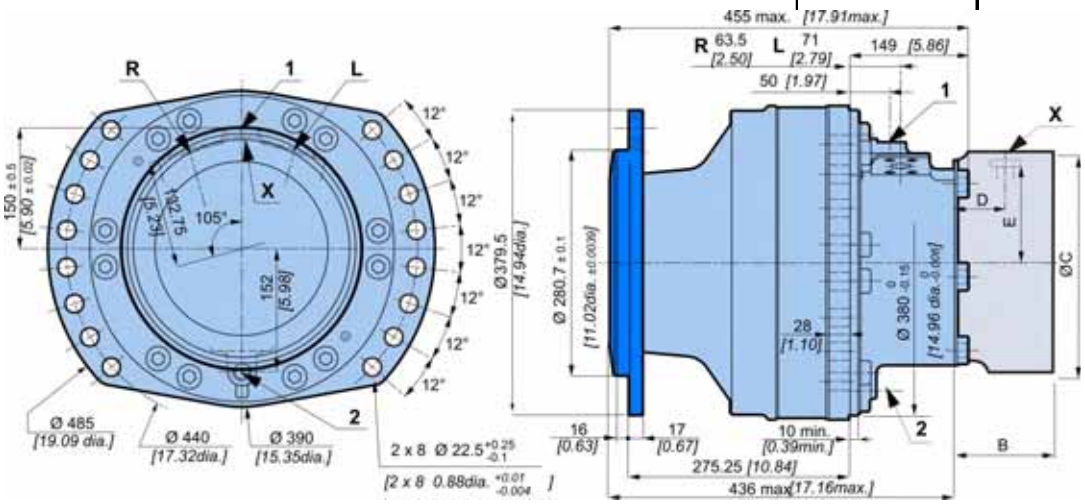

WHEEL MOTOR

Dimensions for standard (1110) 2-displacement motor

	210 kg *[462 lb]*	270 kg *[594 lb]*
	5,00 L *[300 cu.in]*	4,00 L *[240 cu.in]*

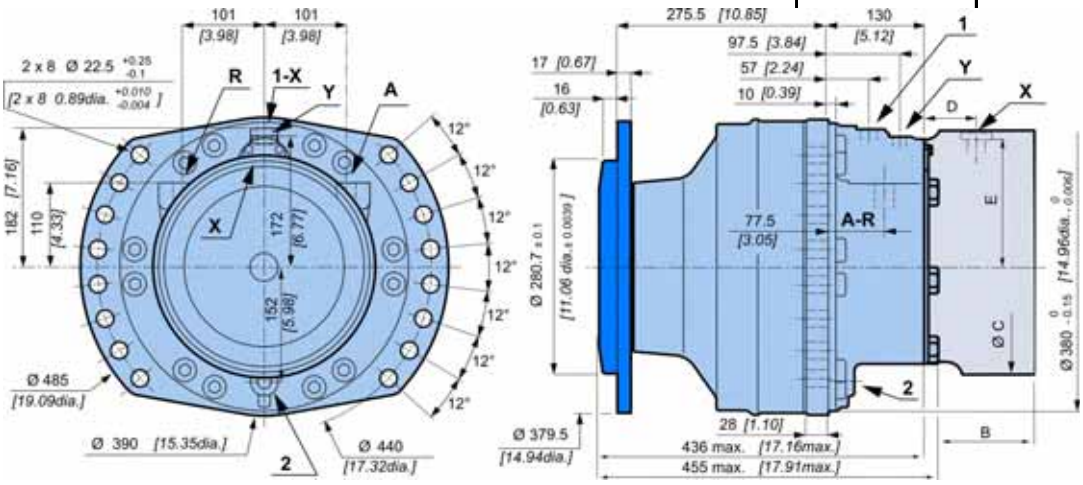

Dimensions for standard (1210) Twin-Lock™

	210 kg *[462 lb]*	270 kg *[594 lb]*
	5,00 L *[300 cu.in]*	4,00 L *[240 cu.in]*

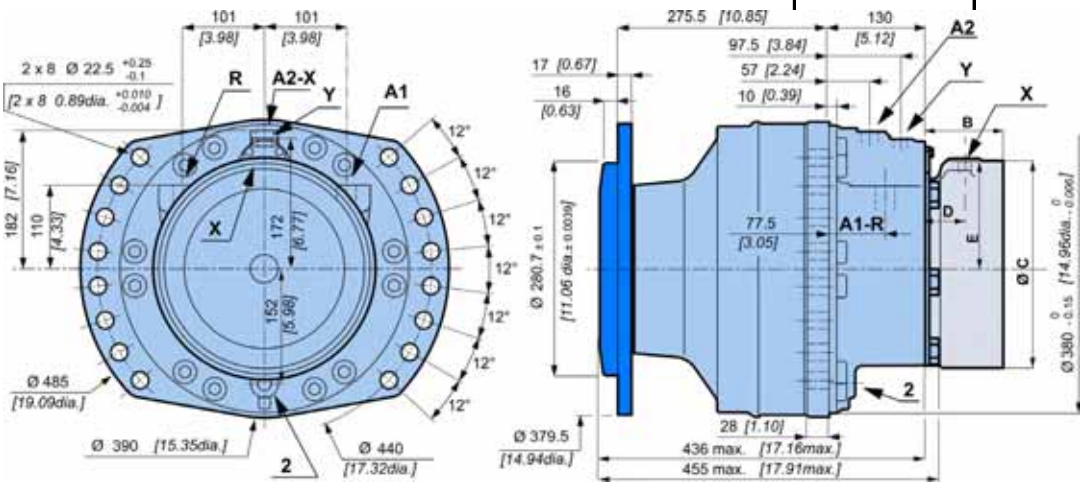

Also see 'Valving systems and hydrobases' section (thumbnail opposite).

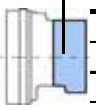

C	P 3 5	F 2 6	F 4 2	F 5 0
B	85 *[3.35]*	128.5 *[5.06]*	142 *[5.59]*	152 *[5.98]*
C	Ø280 *[11.02 dia.]*	Ø375 *[14.76 dia.]*	Ø375 *[14.76 dia.]*	Ø375 *[14.76 dia.]*
D	57 *[2.24]*	50 *[1.95]*	64.0 *[2.52]*	63.5 *[2.50]*
E	138.5 *[5.45]*	183.5 *[7.22]*	183.5 *[7.22]*	183.5 *[7.22]*

Also see 'Brakes' section (thumbnail opposite).

Support types

	C	D	F	P	S
M S 2 5	1	1 2 3	1 2 3	1 2 3 4	1 2 3 4 5 6

C	A mm *[in]*	B mm *[in]*	C mm *[in]*	D mm *[in]*	E mm *[in]*	N mm *[in]*	Wheel rim mountings	L mm *[in]*
1 1 1 0 (1 2 3 4 P)	Ø 280,7 *[11,05 dia.]*	Ø 335 *[13,19 dia.]*	Ø 379 *[14,92 dia.]*	275,5 *[10,85]*	Ø 390 *[15,35 dia.]*	Ø 24 *[0,94 dia.]*	10 x M22x1.5	17 *[0,67]*
1 2 1 0 (1 2 3 4 P)	Ø 370 *[14,57 dia.]*	Ø 425 *[16,73 dia.]*	Ø 472 *[18,58 dia.]*	333,45 *[13,13]*	Ø 390 *[15,35 dia.]*	Ø 26 *[1,02 dia.]*	12 x M24x2	24 *[0,94]*
1 3 1 0 (1 2 3 4 P)	Ø 280,7 *[11,05 dia.]*	Ø 335 *[13,19 dia.]*	Ø 385 *[15,16 dia.]*	236,5 *[9,31]*	Ø 390 *[15,35 dia.]*	Ø 24 *[0,94 dia.]*	10 x M22x1.5	17 *[0,67]*
1 5 1 0 (1 2 3 4 P)	Ø 220,7 *[8,69 dia.]*	Ø 275 *[10,83 dia.]*	Ø 314 *[12,36 dia.]*	241,5 *[9,51]*	Ø 390 *[15,35 dia.]*	8 x Ø 22 *[8 x 0,87 dia.]* 4 x Ø 22 *[4 x 0,87 dia.]*	-	17 *[0,67]*
1 K 3 0 / 1 L 3 0 (1 2 3 4 P)	Ø 280,7 *[11,05 dia.]*	Ø 335 *[13,19 dia.]*	Ø 461,5 *[18,17 dia.]*	337,95 *[13,31]*			10 x M22x1.5	45 *[1,77]*

Also see 'Brakes' section (thumbnail opposite).

Studs

		P mm *[in]*	C min. mm *[in]*	C max. mm *[in]*	D mm *[in]*	Class	(1) * N.m *[lb.ft]*	(2) * N.m *[lb.ft]*
Various studs	M22 x 1.5	80 *[3.15]*	5 *[0.20]*	36 *[1.42]*	26 *[1.02]*	**12.9**	695 *[512.6]*	1 050 *[774.4]*
	M24 x 2	95 *[3.74]*		38 *[1.50]*	30 *[1.18]*		910 *[671.2]*	1 150 *[848.2]*
Screws	M20	-	-			**12.9**	600 *[442.5]*	770 *[567.9]*

(*) The tightening torques are given for the indicated loads.
(1) Wheel rim : Suggested tightening torque for wheel rim mountings (Re steel disc > 240 N/mm² *[>34 800 PSI]*).
(2) Standard : Suggested tightening torque in other cases (Re steel flange 360 > N/mm² *[>52 215 PSI]*)

See generic installation motors N°801478197L.

Load curves

Permissible radial loads

Test conditions :

Static : 0 tr/min *[0 RPM]* 0 bar *[0 PSI]*

Dynamic : 0 tr/min *[0 RPM]*, code 0 displacement, without axial load at max. torque

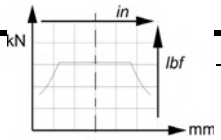

Service life of bearings

Test conditions :

L : Millions B10 revolutions at 150 bars (average pressure), with 25 cSt fluid, code 0 displacement, without axial load.

1	1	1	0
1	2	3	4

P

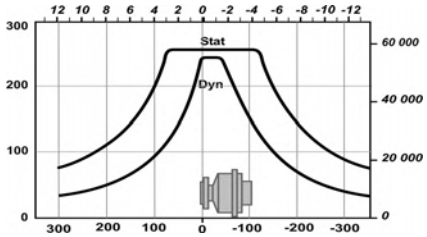

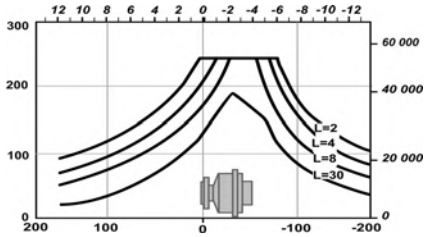

1	2	1	0
1	2	3	4

P

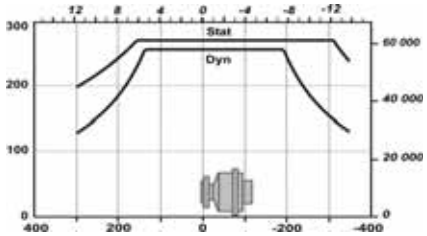

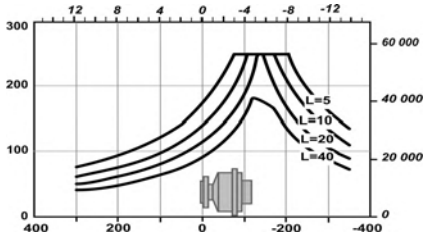

1	3	1	0
1	2	3	4

P

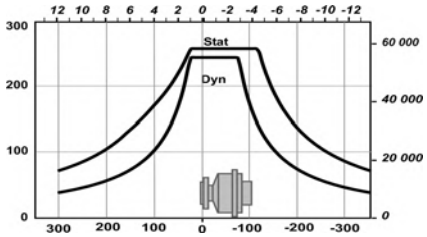

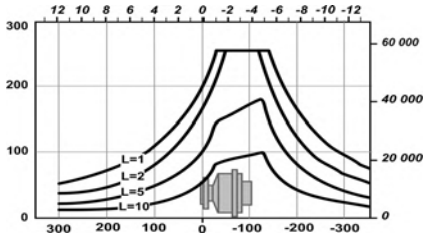

1	5	1	0
1	2	3	4

P

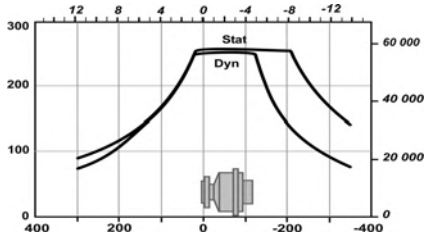

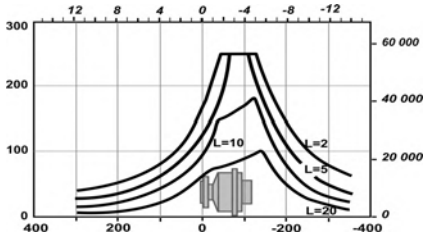

1	K	3	0
1	L	3	0
1	2	3	4

P

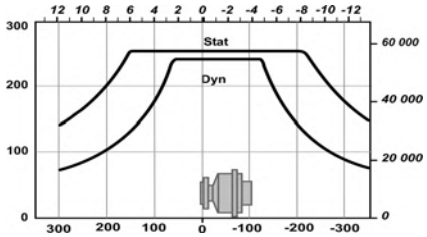

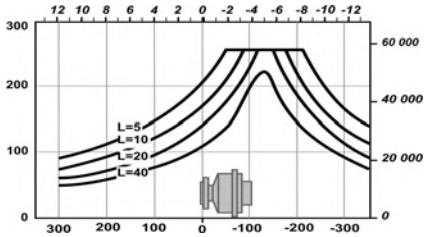

The service life of the components is influenced by the pressure.You must check that the combination of forces applied (Axial load / Radial load) is compatible with the permissible loads for the components, and that the resulting service lives of these components complies with the application's specifications. For an accurate calculation, consult your Poclain Hydraulics application engineer.

SHAFT MOTOR

Dimensions for standard (2A50) 1-displacement motor

	195 kg *[429 lb]*	255 kg *[561 lb]*
	5,00 L *[300 cu.in]*	4,00 L *[240 cu.in]*

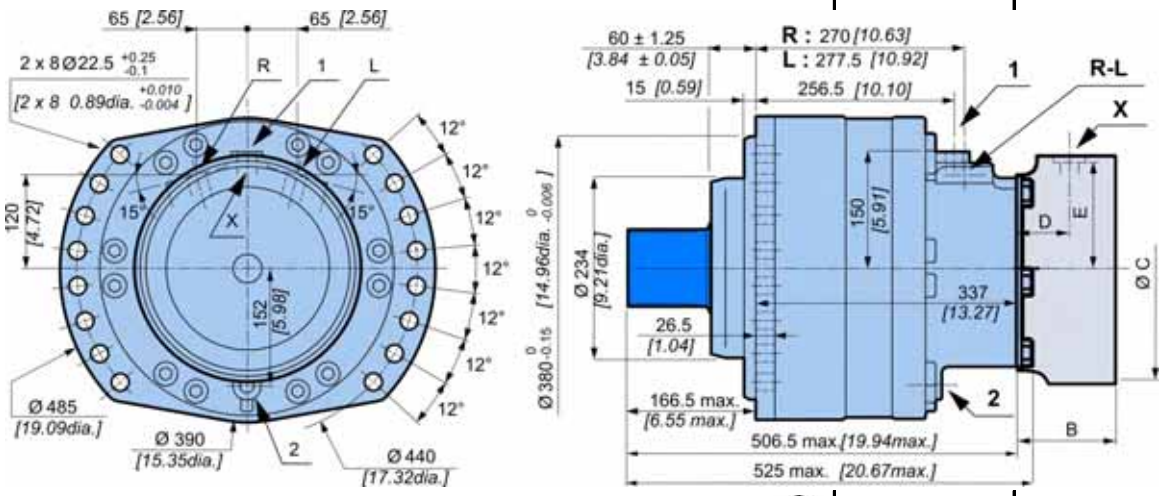

Dimensions for standard (2A50) 2-displacement motor

	195 kg *[429 lb]*	255 kg *[561 lb]*
	5,00 L *[300 cu.in]*	4,00 L *[240 cu.in]*

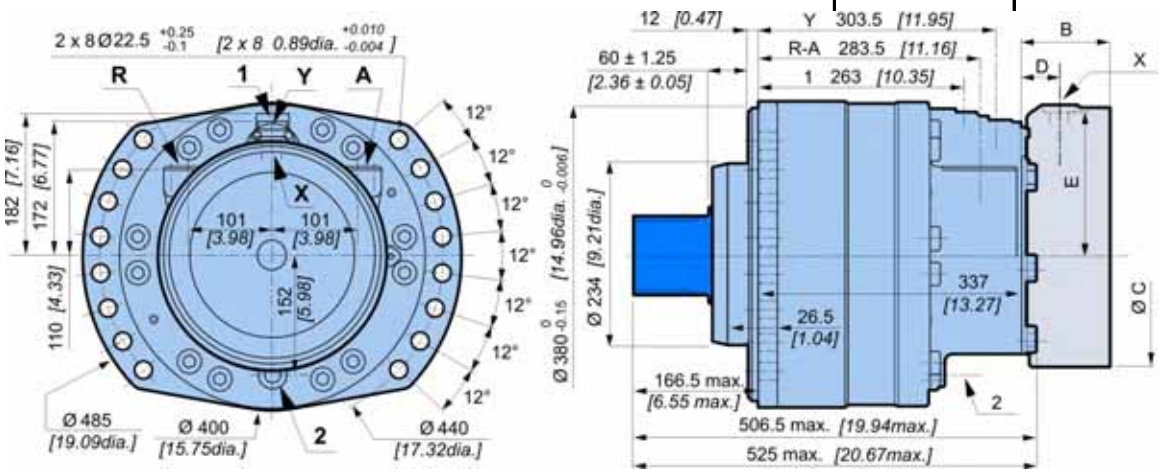

Also see 'Valving systems and hydrobases' section (thumbnail opposite).

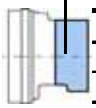

C	P35	F26	F42	F50
B	85 *[3.35]*	128.5 *[5.06]*	142 *[5.59]*	152 *[5.98]*
C	Ø280 *[11.02 dia.]*	Ø375 *[14.76 dia.]*	Ø375 *[14.76 dia.]*	Ø375 *[14.76 dia.]*
D	57 *[2.24]*	50 *[1.95]*	64.0 *[2.52]*	63.5 *[2.50]*
E	138.5 *[5.45]*	183.5 *[7.22]*	183.5 *[7.22]*	183.5 *[7.22]*

Also see 'Brakes' section (thumbnail opposite).

Support types

	C	D	F	P	S
	1	1 2 3	1 2 3	1 2 3 4	1 2 3 4 5 6
M S 2 5					

			A	B	C	D	E	F
	DIN 5480 splines							
2 A 5 0 (1 2 3 4 / P)	Nominal Ø	100 *[3,94]*	23 *[0,91]*	R 4 *[R 0,16]*	35 *[1,38]*	2 x M14	25 *[0,98]*	105 *[4,13]*
	Module	3						
	Z	32						
	NF E22-141 splines							
2 A 1 0 (1 2 3 4 / P)	Nominal Ø	100 *[3,94]*	23 *[0,91]*	R 4 *[R 0,16]*	35 *[1,38]*	2 x M14	26,5 *[1,04]*	105 *[4,13]*
	Module	2,5						
	Z	38						

Also see 'Valving systems and hydrobases' section (thumbnail opposite).

Splined coupling

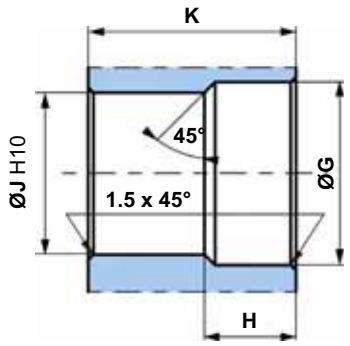

N : Nominal Ø.
Mo : Module.
Z : Number of teeth.

Standard DIN 5480
Pressure angle 30°.
Centering on flanks.
Slide adjustment (7H quality).

Standard NF E 22-141
Pressure angle 20°.
Centering on flanks.
Slide adjustment (7H quality).

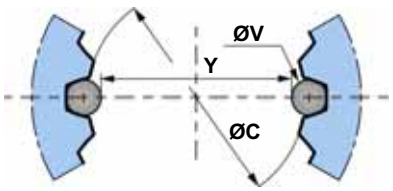

	Ø G	H	Ø J	K	N	Mo	Z	Offset	Ø C (H10)	Ø V	Y	Tolerance µm *[µin]*
2 A 1 0 (1 2 3 4 / P)	101 *[3,98]*	28 *[1,10]*	95 *[3,74]*	104 *[4,09]*	100 *[3,94]*	2,5	38	2 *[0,08]*	95 *[3,74]*	5 *[0,20]*	90,125 *[3,55]*	+ 104 / 0 *[+4.0945 / 0]*
2 A 5 0 (1 2 3 4 / P)	101,5 *[4,00]*	28 *[1,10]*	94 *[3,70]*	104 *[4,09]*	100 *[3,94]*	3	32	- 0,35 *[0,0138]*	94 *[3,70]*	5,25 *[0,21]*	89,066 *[3,51]*	+ 73 / 0 *[+2.874 / 0]*

General tolerances : ± 0.25 *[±0.0098]*.
Material : Ex: 42CrMo4.
Hardening treatment to obtain R = 800 to 900 N/mm² *[R = 116 030 to 130 533 PSI]*.

Load curves

Permissible radial loads

Test conditions :

Static : 0 tr/min *[0 RPM]* 0 bar *[0 PSI]*

Dynamic : 0 tr/min *[0 RPM]*, code 0 displacement, without axial load at max. torque

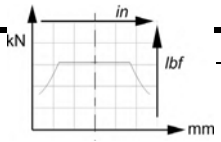

Service life of bearings

Test conditions :

L : Millions B10 revolutions at 150 bars (average pressure), with 25 cSt fluid, code 0 displacement, without axial load.

2	A	5	0
2	A	1	0
1	2	3	4

P

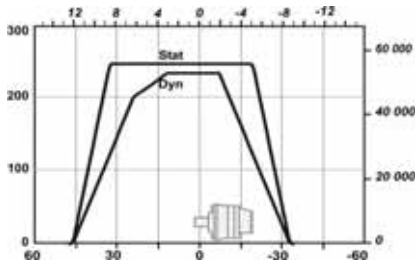

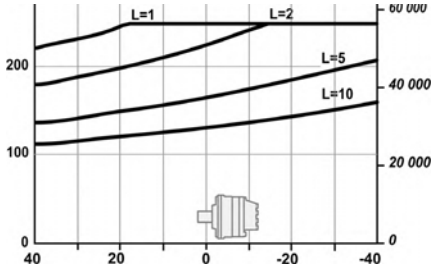

The service life of the components is influenced by the pressure.You must check that the combination of forces applied (Axial load / Radial load) is compatible with the permissible loads for the components, and that the resulting service lives of these components complies with the application's specifications. For an accurate calculation, consult your Poclain Hydraulics application engineer.

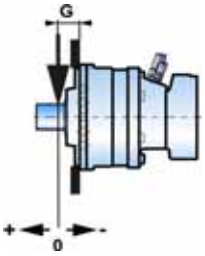

	G
2 A 1 0	115,75 *[4,56]*
2 A 5 0	125 *[4,92]*

VALVING SYSTEMS AND HYDROBASES

	C	D	F	P	S
	1	1 2 3	1 2 3	1 2 3 4	1 2 3 4 5 6
M S 2 5					

Dimensions for 1-displacement valving

	13,8 kg *[30 lb]*	19,9 kg *[44 lb]*
	0,35 L *[21 cu.in]*	0,45 L *[27 cu.in]*

D 1 2 3: 1 2 ▯ — D 1 2 3: 1 1 ▯

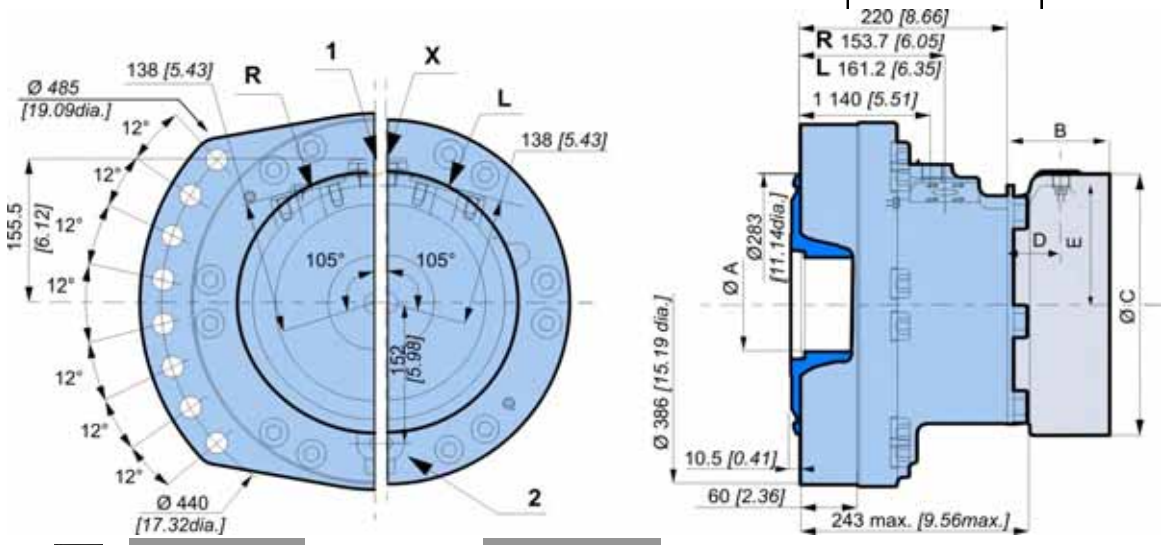

C	P 3 5	F 2 6	F 4 2	F 5 0
B	85 *[3.35]*	128.5 *[5.06]*	142 *[5.59]*	152 *[5.98]*
C	Ø280 *[11.02 dia.]*	Ø375 *[14.76 dia.]*	Ø375 *[14.76 dia.]*	Ø375 *[14.76 dia.]*
D	57 *[2.24]*	50 *[1.95]*	64.0 *[2.52]*	63.5 *[2.50]*
E	138.5 *[5.45]*	183.5 *[7.22]*	183.5 *[7.22]*	183.5 *[7.22]*

Also see 'Brakes' section (thumbnail opposite).

Cylinder block splines

(as per standard NF E22-141)

ØA	Module	Z	Dimension on 2 pins Y	ØV
100 *[3,937]*	2,5	38	90,169 *[3,550]*	5 *[0,197]*

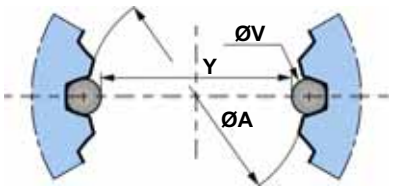

You are advised to have the installation validated by your Poclain Hydraulics application engineer before using the hydraulic unit in an application.

We must provide you with a detailed plan of the interface for any hydraulic unit use, consult your Poclain Hydraulics sales engineer.

Dimensions for 2-displacement valving

	13,8 kg *[30 lb]*	19,9 kg *[44 lb]*
	0,35 L *[21 cu.in]*	0,45 L *[27 cu.in]*

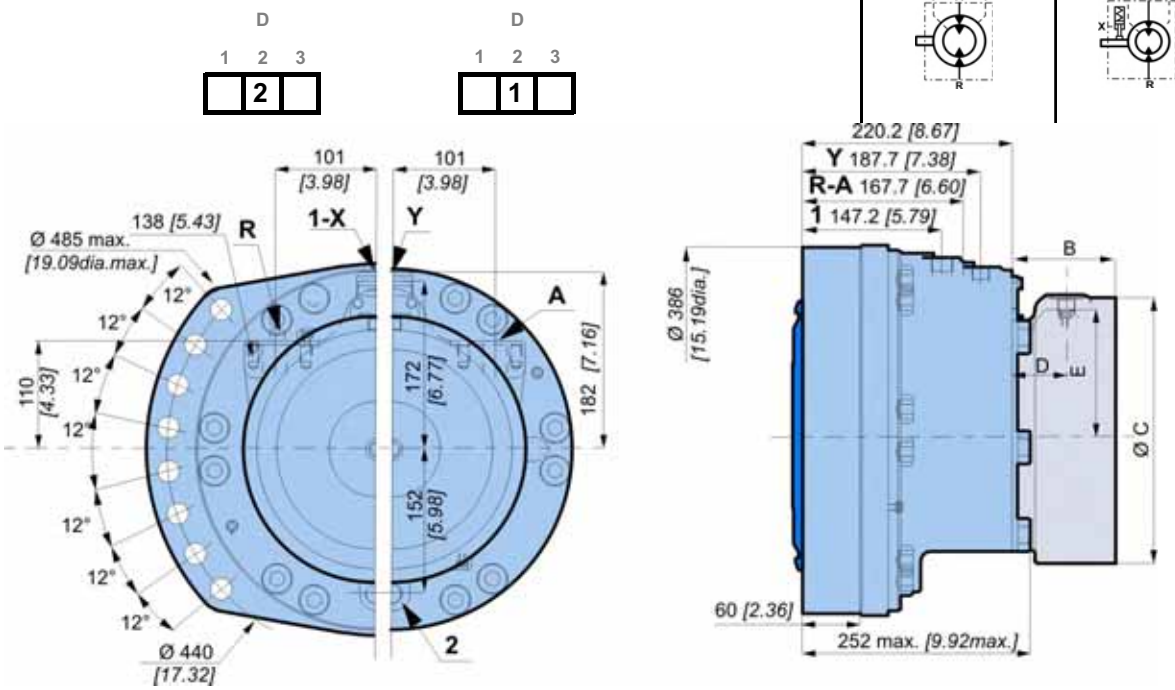

Dimensions for 2-displacement symetrical valving

	13,8 kg *[30 lb]*	19,9 kg *[44 lb]*
	0,35 L *[21 cu.in]*	0,45 L *[27 cu.in]*

For a small displacement, there is no preferred orientation for this motor.

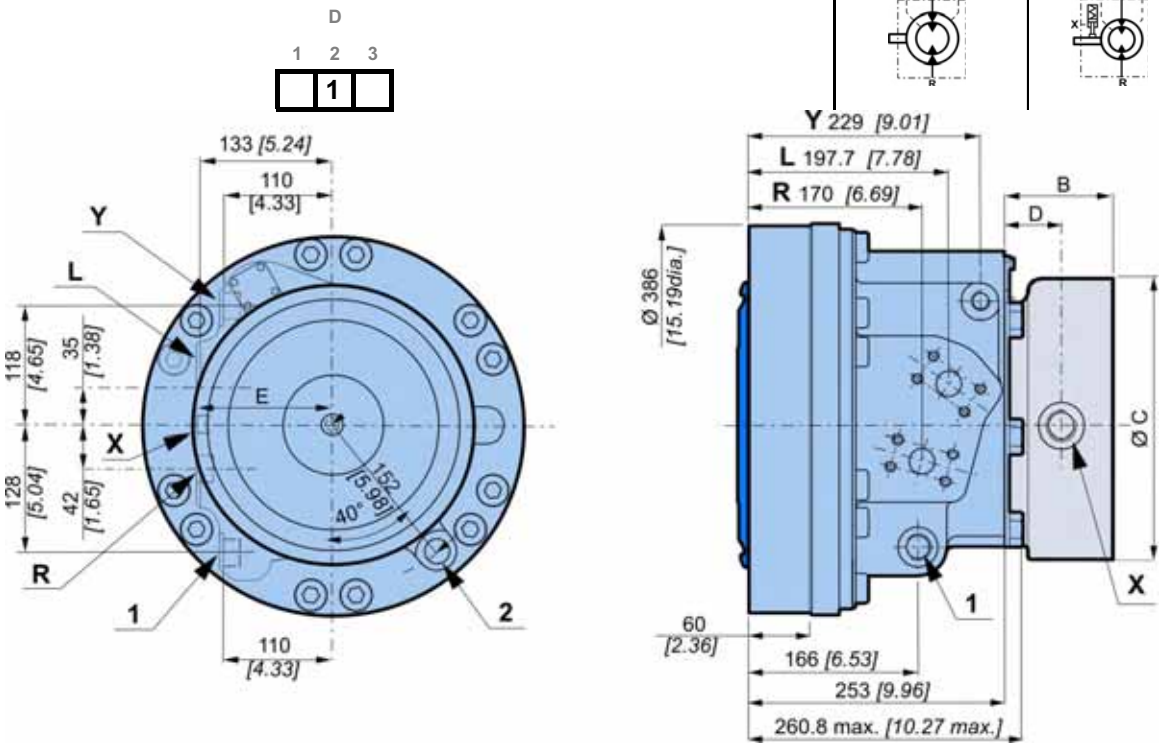

Dimensions for Twin-Lock™

	13,8 kg *[30 lb]*	19,9 kg *[44 lb]*
	0,35 L *[21 cu.in]*	0,45 L *[27 cu.in]*
	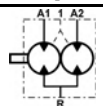	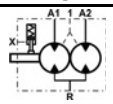

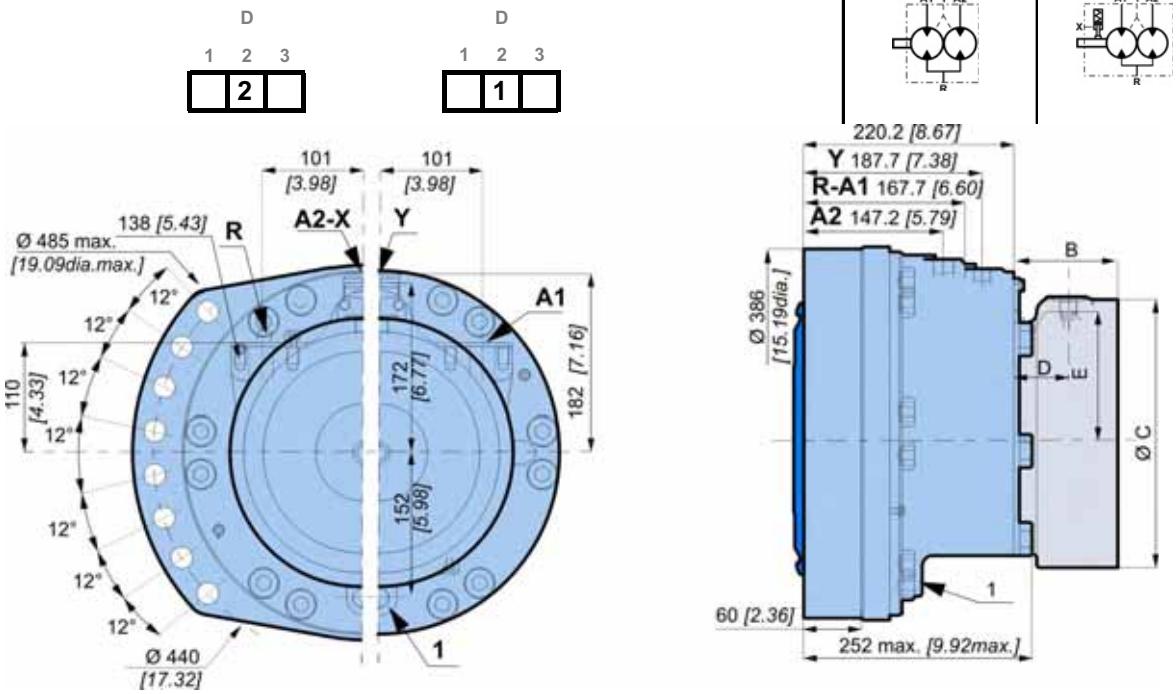

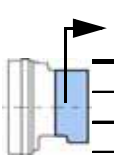

C	P 3 5	F 2 6	F 4 2	F 5 0
B	85 *[3.35]*	128.5 *[5.06]*	142 *[5.59]*	152 *[5.98]*
C	Ø280 *[11.02 dia.]*	Ø375 *[14.76 dia.]*	Ø375 *[14.76 dia.]*	Ø375 *[14.76 dia.]*
D	57 *[2.24]*	50 *[1.95]*	64.0 *[2.52]*	63.5 *[2.50]*
E	138.5 *[5.45]*	183.5 *[7.22]*	183.5 *[7.22]*	183.5 *[7.22]*

Also see 'Brakes' section (thumbnail opposite).

Chassis mountings

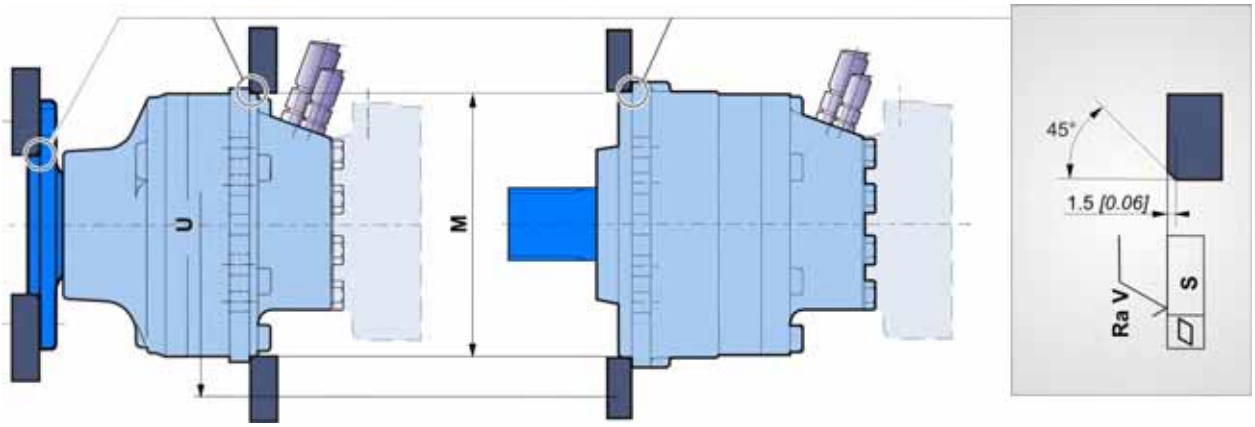

Take care over the immediate environment of the connections.

	ØM (1)	ØU	S	Ra V		Class	*
Wheel motor Shaft motor	380 *[14,96]*	440 *[17,32]*	0,2 *[0,008]*	12,5µm *[0,49µin]*	2 x 8 Ø22.5 M20 x 2	**8,8**	410 N.m *[302 lb.ft]*

(1) +0,3 *[+0,012]*
+0,2 *[+0,008]*

* : Min. values for torque and load to be transmitted.

Hydraulic connections

connections

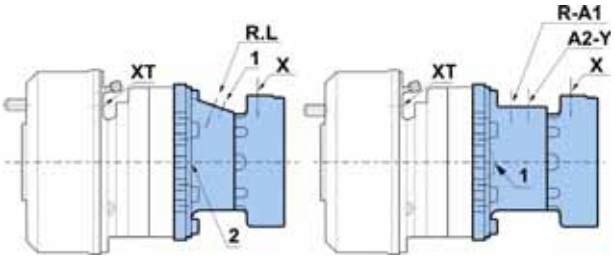

M	S	2	5																		
				1	1	2	3	1	2	3	1	2	3	4	1	2	3	4	5	6
				C	D			F			P				S					

		Old standards	Standards	Power supply		Case drain	2nd displacement control	Control of parking break	Control of drum break
				R-L		1, 2		X	XT
	1	ISO 6 162 DIN 3 852	**ISO 6 162** **ISO 9 974-1**	DN25 PN400		M22x1.5		M18x1.5	
				R-A		1, 2	Y	X	
	1	ISO 6 162 DIN 3 852	**ISO 6 162** **ISO 9 974-1**	DN25 PN400		M22x1.5	M18x1.5	M18x1.5	
	1*	ISO 6 162 DIN 3 852	**ISO 6 162** **ISO 9 974-1**	DN25 PN400		M27x2	M20x1.5	M18x1.5	
				R-A1	A2	1, 2	Y	X	
	1	ISO 6 162 DIN 3 852	**ISO 6 162** **ISO 9 974-1**	DN25 PN400	M27x2	M22x1.5	M18x1.5	M18x1.5	
			ISO 9 974-1						M14x1.5
Max. pressures			**MS** bar *[PSI]*	450 *[6 527]*		1 *[15]*	30 *[435]*	30 *[435]*	120 *[1 740]*

***** : Only symmetrical valving

You are strongly advised to use the fluids specified in brochure "Installation guide" N° 801478197L.

To find the connections' tightening torques, see the brochure "Installation guide" N° 801478197L.

Efficiency

Overall efficiency

Average values given for guidance for code 0 displacement after 100 hours of operation with HV46 hydraulic fluid at 50°C *[122°F]*.

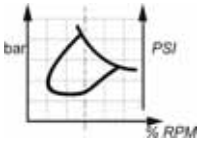

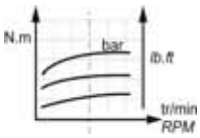

Actual output torque

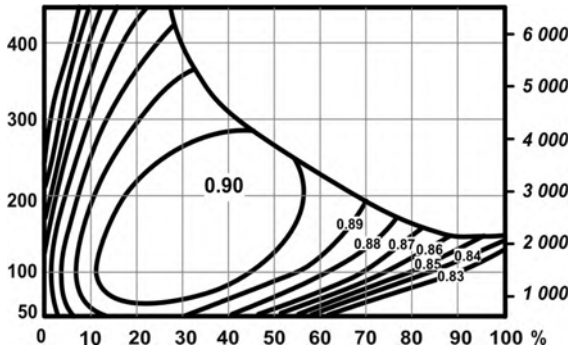

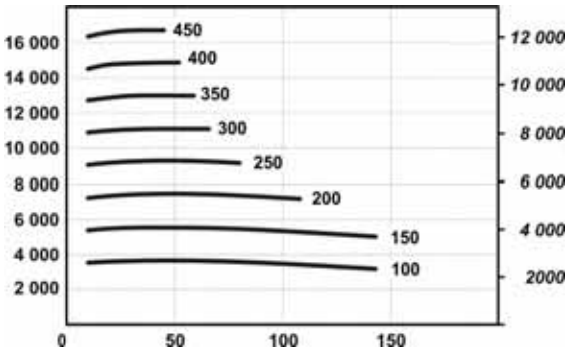

The starting torque is taken to be approximately 85% of the first value for available pressure. For a precise calculation, consult your Poclain Hydraulics application engineer.

BRAKES

Rear brake

	C	D	F	P	S
	1	1 2 3	1 2 3	1 2 3 4	1 2 3 4 5 6
M S 2 5			P 3 5		

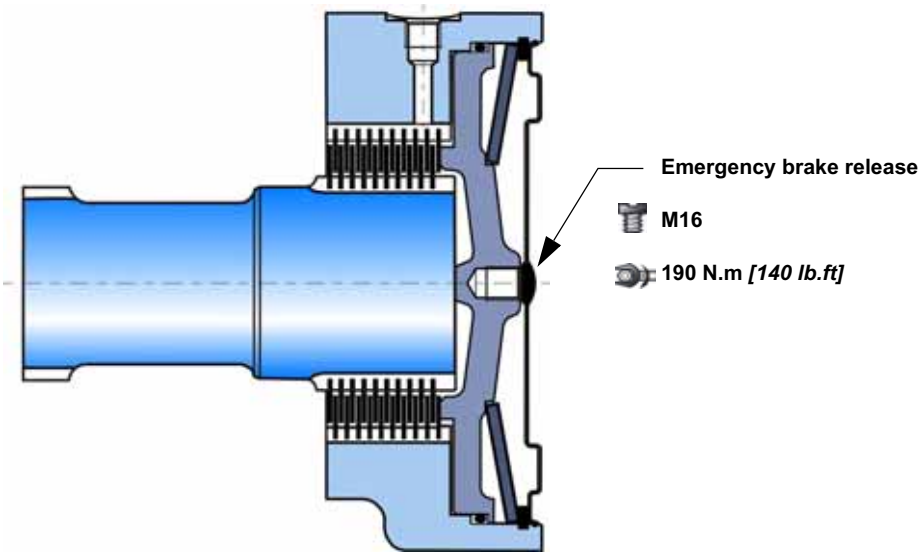

Brake principle
This is a multidisc brake which is activated by a lack of pressure. The spring exerts a force on the piston, which resses on the fixed and mobile discs, and immobilizes the shaft. The braking torque decreases in linear proportion to the brake release pressure.

C	P 3 5
Parking brake torque at 0 bars on housing (new brake	20 500 Nm *[15 120 lb.ft]*
Dynamic emergency braking torque at 0 bars on housing (max. 10 uses of emergency brakes	13 325 Nm *[9 830 lb.ft]*
Residual parking braking at 0 bars on housing *	15 375 Nm *[11 340 lb.ft]*
Min. brake release pressure	12 bar *[174 PSI]*
Max. brake release pressure	30 bar *[435 PSI]*
Oil capacity	700 cm³ *[42,7 cu.in]*
Volume for brake release	70 cm³ *[4,3 cu.in]*

* After emergency brake has been used

Do not run in multidisc brakes.

A functional check of the parking brake must be carried out each time it is used as an auxiliary brake (or emergency brake). For all vehicles capable of speeds over 25 km/hour, please contact your Poclain Hydraulics application engineer.

Rear brake

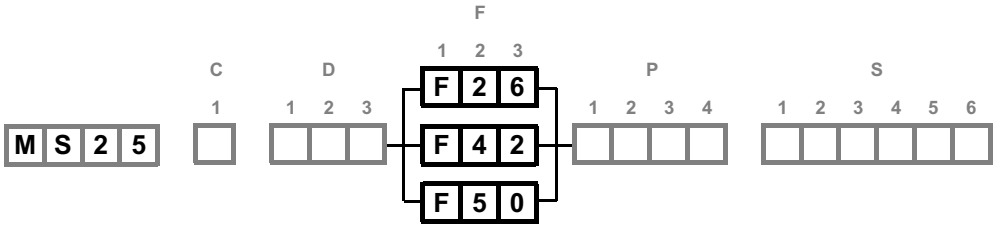

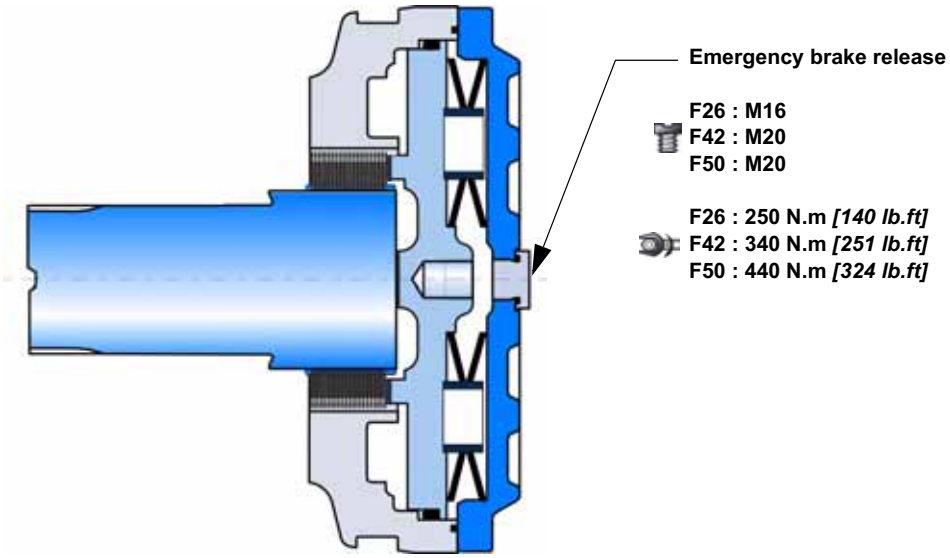

Brake principle

This is a multidisc brake which is activated by a lack of pressure. The spring exerts a force on the piston, which resses on the fixed and mobile discs, and immobilizes the shaft. The braking torque decreases in linear proportion to the brake release pressure.

C	F 2 6	F 4 2	F 5 0
Parking brake torque at 0 bars on housing (new brake	26 730 Nm *[19 720 lb.ft]*	25 000 Nm *[18 440 lb.ft]*	30 000 Nm *[22 130 lb.ft]*
Dynamic emergency braking torque at 0 bars on housing	17 375 Nm *[12 820 lb.ft]*	16 250 Nm *[11 990 lb.ft]*	19 500 Nm *[14 380 lb.ft]*
Residual parking braking at 0 bars on housing *	20 048 Nm *[14 790 lb.ft]*	18 750 Nm *[13 830 lb.ft]*	22 500 Nm *[16 600 lb.ft]*
Min. brake release pressure	10 bar *[138 PSI]*	12 bar *[174 PSI]*	12 bar *[174 PSI]*
Max. brake release pressure	30 bar *[435 PSI]*	30 bar *[435 PSI]*	30 bar *[435 PSI]*
Oil capacity	200 cm³ *[12,2 cu.in]*	400 cm³ *[24,4 cu.in]*	450 cm³ *[27,5 cu.in]*
Volume for brake release	120 cm³ *[7,3 cu.in]*	135 cm³ *[8,2 cu.in]*	135 cm³ *[8,2 cu.in]*

* After emergency brake has been used

Do not run in multidisc brakes.

A functional check of the parking brake must be carried out each time it is used as an auxiliary brake (or emergency brake). For all vehicles capable of speeds over 25 km/hour, please contact your Poclain Hydraulics application engineer.

Drum brake (432 x 102)

Diameter of brake pads : Ø 432 *[17 dia.]*
Width of friction surface : 102 *[4,01]*

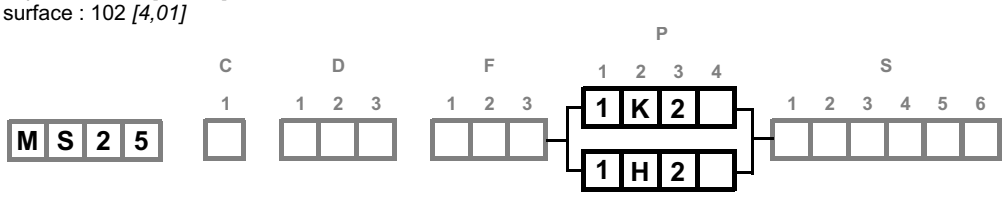

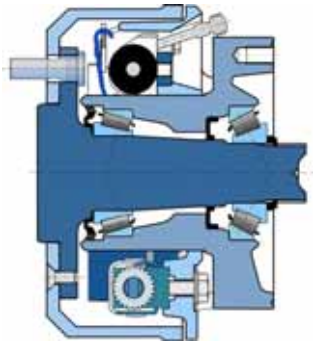

Brake pads			C
Asbestos free material		BERAL 1109 or JURID 505	
Compensation for wear		Automatic	
Hydraulically controlled dynamic braking			
Max. permissible continuous brake torque		16 200 N.m *[11 948 lb.ft]*	
Pressure to obtain max. permissible continuous brake torque		71 bar *[1 028 PSI]*	
Max. permissible brake torque		27 000 N.m *[19 914 lb.ft]*	
Pressure to obtain max. permissible brake torque		120 bar *[1 740 PSI]*	
Fluid			
Mineral		Yes	**H - K**
DOT 3 / DOT 4 / SAE J1703		No	
Max. volume required to bring pads into contact		10.2 cm^3 *[0.62 cu.in]*	
Mechanically controlled parking brake			
Max. braking torque		27 000 N.m *[19 914 lb.ft]*	
Max permissible force on the cable		5 700 N *[1 281 lbf]*	
Force required to bring pads into contact		37 N *[8 lbf]*	
Stroke required to bring pads into contact (new brake)	**A**	19 mm *[0.73 ”]*	
	B	16 mm *[0.63 ”]*	

End view of shaft

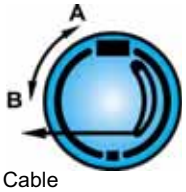

Cable

The max. braking torque can only be obtained when the brake has been run in. Consult your Poclain Hydraulics application engineer.

Control
The drum brakes can be controlled hydraulically (service brake) and by a cable (mechanical control for parking brake).

Do not use hydraulic and mechanical brake controls simultaneously.

See also 'Wheel motor' section (thumbnail opposite)

When making an encoding request, you must indicate the following information:
- The material of the brake linings,
- The type of connection at the end of the parking brake control cable,
- Fill out the technical questionnaire for validation of the brake.

OPTIONS

	C	D	F	P	S
	1	1 2 3	1 2 3	1 2 3 4	1 2 3 4 5 6
M S 2 5					

You can accumulate more than one optional part. Consult your Poclain Hydraulics sales engineer.

1 - Fluorinated elastomer seals

Nitrile seals marked in the figure below replaced by fluorinated elastomer seals.

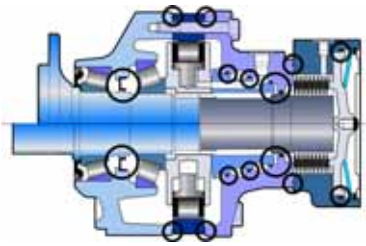

Consult your Poclain Hydraulics sales engineer.

2 - S - 8 - Installed speed sensor or predisposition

Designation	C
T4 Speed sensor installed	2
TR Speed sensor installed (direction of rotation)	S
Predisposition for speed sensor	8

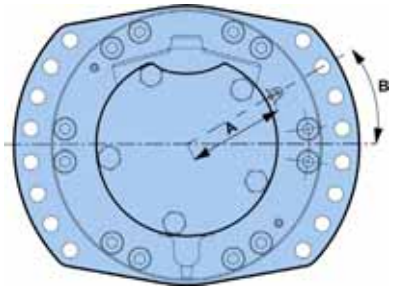

	mm *[in]*	mm *[in]*
A	118,9 *[4,68]*	118,9 *[4,68]*
B	0°	20°
	2-displacement	1-displacement

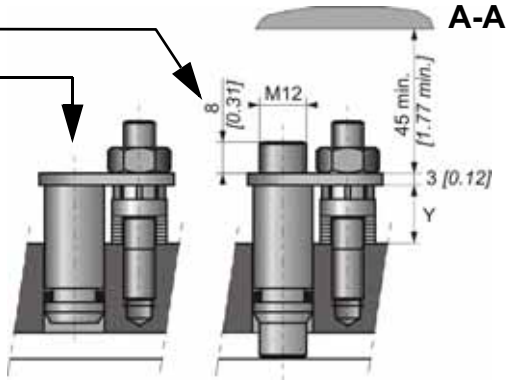

Max. length Y= 15.6

Standard number of pulses per revolution= 56

Look at the "Mobile Electronic" N° A01889D technical catalogue for the sensor specifications and its connection.

To install the sensor, see the "Installation guide" brochure No. 801478197L.

6 - Industrial support

Reduction of around 50% from the rated value in the bearings' preload value.

For a precise calculation, consult your Poclain Hydraulics application engineer.

7 - Diamond™

Special treatment of the motor core which considerably increases its strength, making the motor much more tolerant to temporary instances of the operating conditions being exceeded.

9 - Double-centering valving cover

This option allows a motor to be installed from the front or the back.

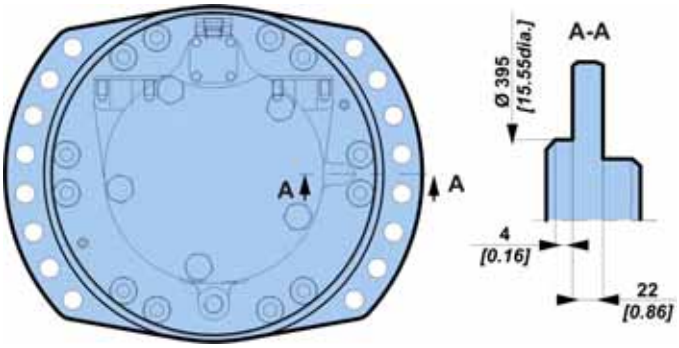

A - Hollow shaft

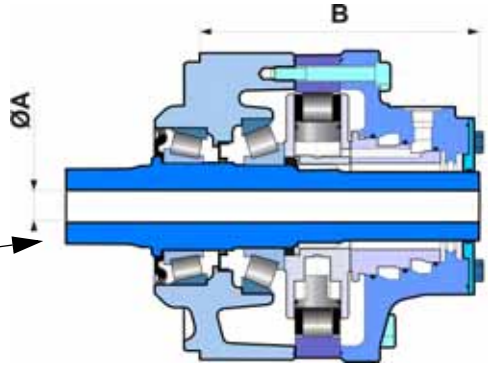

2 M8 screws: Ø 80mm *[3.14"dia.]* diametrically opposite.
Threaded depth
12 mm min. *[0.47"min.]*

A mm *[in]*	B mm *[in]*
Ø 60 *[2,36 dia.]*	352,5 *[13,88]*

Radial load x 0.75
No torque transmittable to the rear

B - Drain on the bearing support

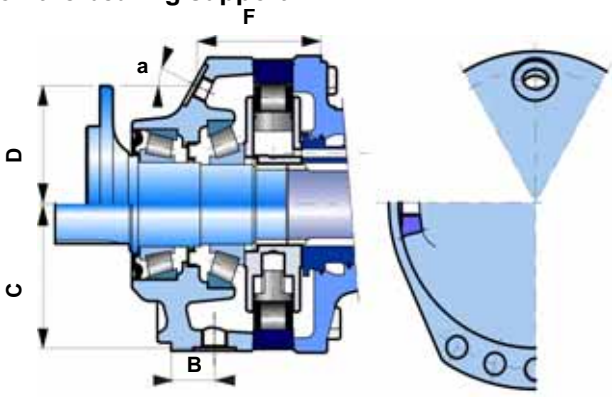

		B	C	D	F	a
		mm *[in]*	mm *[in]*	mm *[in]*	mm *[in]*	
Shaft motor	**M22 x 1.5**	56,0 *[2,20]*	193 *[7,60]*			
Wheel motor				112,0 *[4,41]*	113 *[4,43]*	30°

C - Abrasive environments (mechanical seal)

Some environments can be very harmful. The mirror seal gives reinforced motor sealing.

Mechanical seal

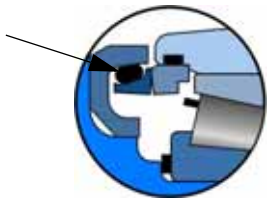

These seals are available for standard wheel motors and short wheel motors.

E - Reinforced sealing

Requires reinforced seals and, for an unbraked motor, a rear reinforced plate (**R25** - 15 *[0.594]*thick, instead of 6 *[0.237]*).

	C	D	F	P	S
	1	1 2 3	1 2 3	1 2 3 4	1 2 3 4 5 6
M S 2 5			R 2 5		E

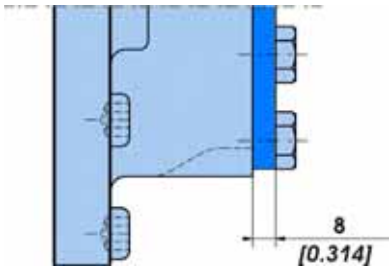

G - Special wheel rim mounting

Enables certain combinations different from the standard mountings defined on page 10.

Consult your Poclain Hydraulics sales engineer.

J - Treated shaft

Heat treatment on the indicated bearing radius and splines.

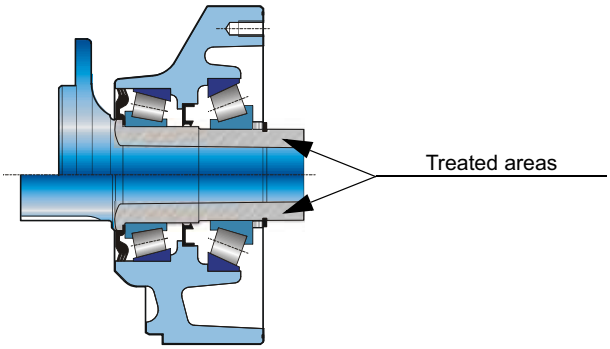

Thirteen subsidiaries and a worldwide network of more than 150 distributors and partners ...

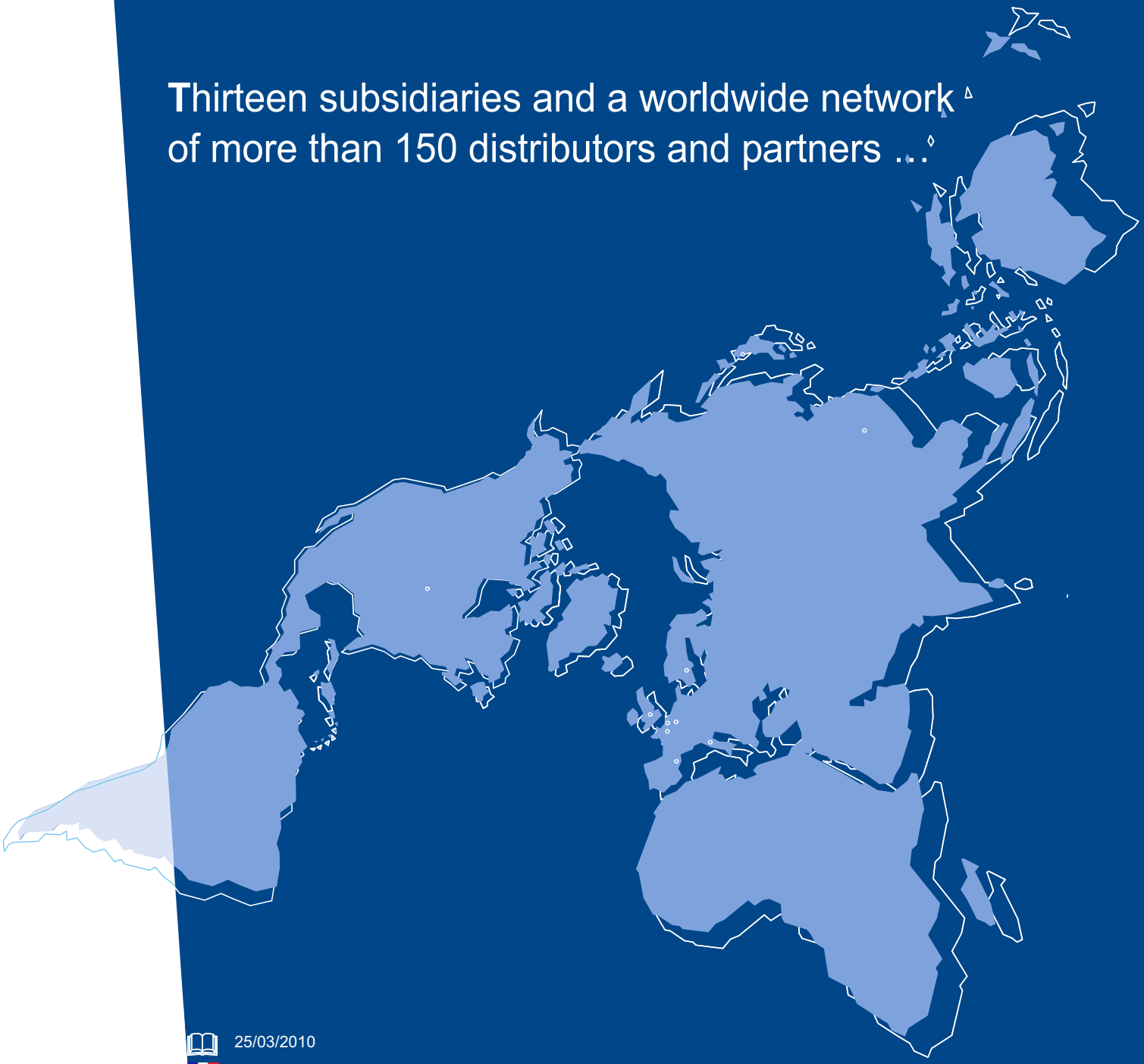

25/03/2010

801 478 122E

801 478 192F

801 578 105G

801 578 117U

801 578 129H

Not available

Not available

A14244H

POCLAIN HYDRAULICS **WWW.POCLAIN-HYDRAULICS.COM**